CarboNIX 15

Microsatellite Separation System

User Guide

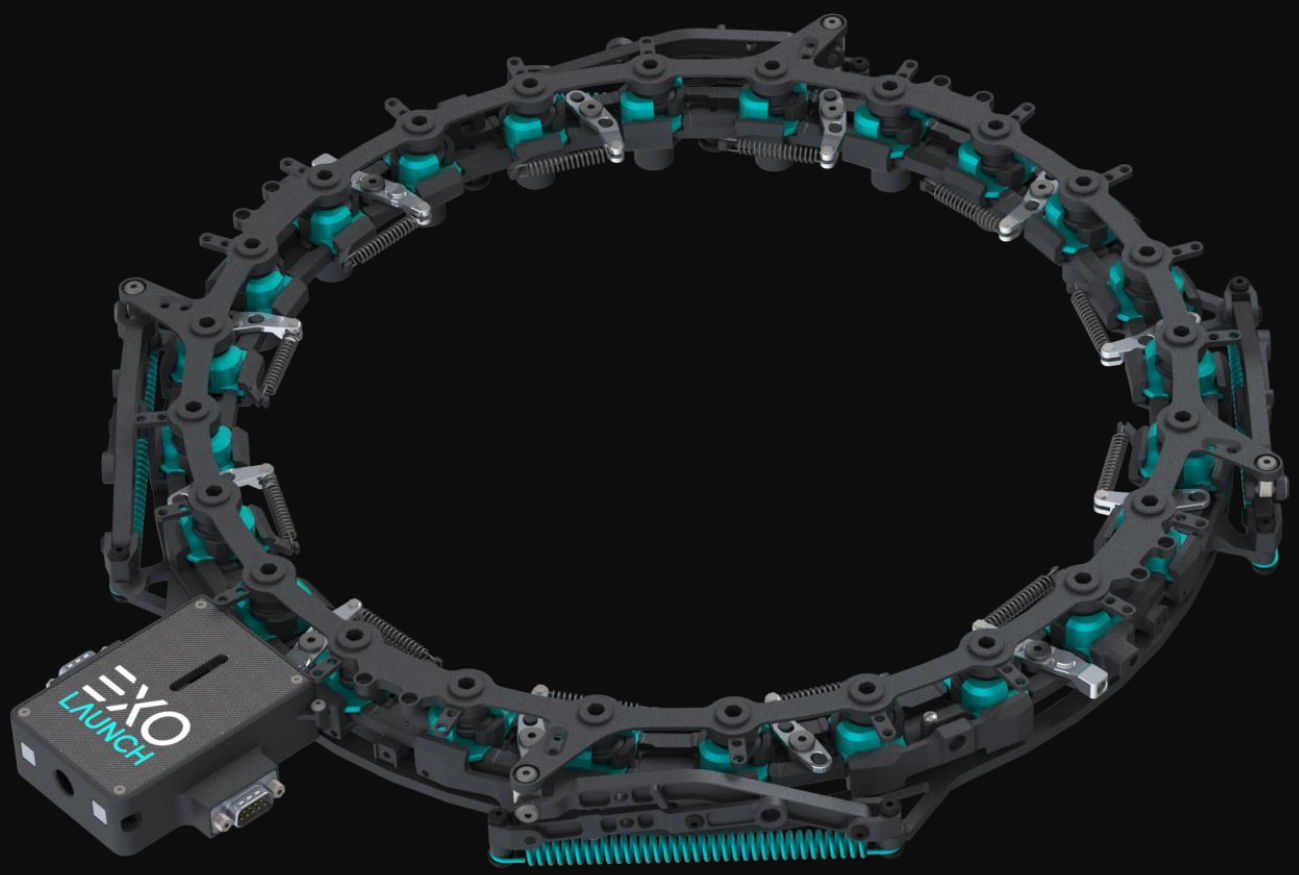

EXOLAUNCH GmbH | Reuchlinstr. 10 | 10553 Berlin | Germany

TABLE OF CONTENTS

1. Introduction

All satellites require a separation system to separate the spacecraft from the launch vehicle. Traditionally, spacecraft designers have relied on pyro elements and compression spring pushers separation systems to separate objects in space. Launch vehicles often use pyrotechnic devices such as explosive bolts to decouple the two objects. The use of pyrotechnics provide instantaneous operation, are low weight, and require little input energy.

The use of pyrotechnics for separation systems has some severe drawbacks: they are not reusable, can be hazardous, may generate space debris, and worst of all they generate high magnitude, high frequency shock waves that can damage sensitive electrical components.

In response to these concerns, a multitude of alternatives to pyrotechnic separation devices have been developed. These systems address many of the shortfalls of pyrotechnic systems, but still some issues have remained.

Most systems, while still lower shock than pyrotechnic systems, still generate significant shock loads on the satellite due to the release of stored energy. Some systems do not provide instantaneous deployment, are difficult to reset, are difficult to adapt to different launch vehicles, or are restricted in their application due to export regulations.

The CarboNIX Microsatellite Separation System has been developed in this context. It generates extremely low-shock values, can be reset in minutes, opens instantaneously when commanded, and can easily be adapted to any launch vehicle without restriction.

1.1 What is CarboNIX?

CarboNIX is a family of separation systems for small satellites. CarboNIX uses a unique shock-free technology to reduce the risk of damaging sensetive satellite optical payloads and electronic components. CarboNIX also uses a unique spring pusher system which separates the satellite before the shocks are generated. This means that all shock forces can only reach the spacecraft by traveling through the linkages, and since shock forces are attenuated by joints and distance, the shock loads that reach the spacecraft are much reduced. In addition, the mechanical linkage system has a separation action up to 7 times longer than competing systems, providing the spacecraft a much gentler separation experience. All these features make CarboNIX the lowest-shock separation system ever used in space.

CarboNIX is also designed and manufactured entirely within Europe, meaning it is not subject to strict export regulations such as ITAR. This reduces the cost and complexity of using CarboNIX, and allows it to fly on any launcher in the world. CarboNIX has been specifically designed to easily adapt to any launch vehicle.

CarboNIX is manufactured using only COTS components. As with all EXOLAUNCH technology, CarboNIX is manufactured in Germany in a facility certified to ISO 9001:2015 standard, which requires regular inspection of the manufacturing and assembly facilities and ensures a stable quality of the final product. These same quality standards are applied to the qualification and acceptance testing processes.

CarboNIX has some unique advantages over other microsatellite separation systems:

- **Shock-free separation.** Very low shocks are generated during separation, making it very gentle on delicate satellite components. In comparison with other separation systems on the market CarboNIX is a shock-free separation sytsem.
- **Fast reset time.** The whole system can be triggered and reset in minutes.
- **Flexible.** CarboNIX can be used and adapted with any launch vehicle.
- **Cluster compatible.** CarboNIX can be easily added to a large cluster launch.
- **Lightweight.** CarboNIX weighs just 2.6 kg.
- **Thin.** In the stowed state, CarboNIX is less than 50 mm thick.
- **Space qualified.** CarboNIX was successfully qualified in space in 2019.

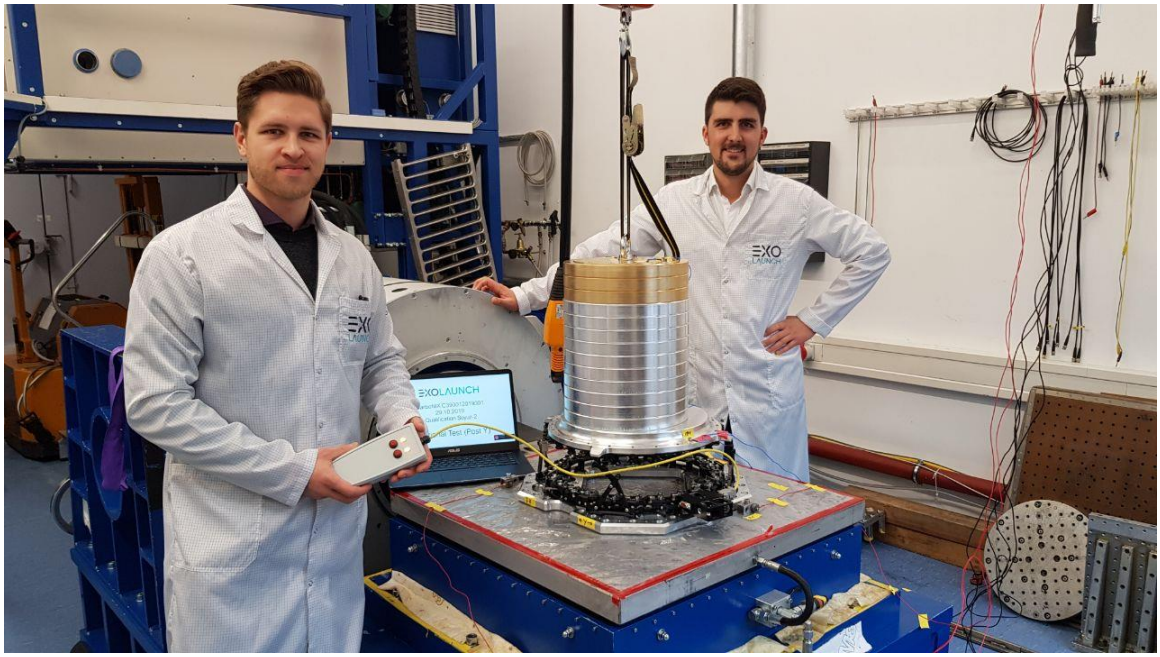

Figure 1: Qualification of CarboNIX 15 for 100 kg Payload on Soyuz

Figure 2: CarboNIX 15 IM Units

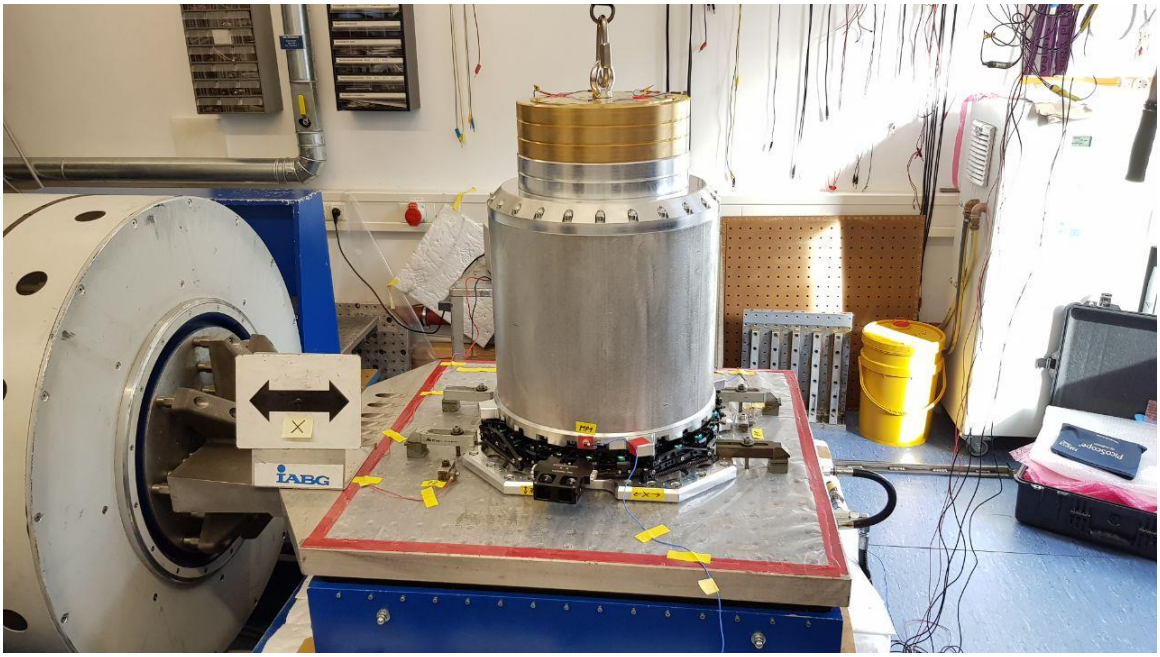

Figure 3: Qualification of CarboNIX 15 for 120 kg Payload on Falcon 9 Rideshare

Figure 4: CarboNIX and payload integration with upper stage.

2. Quick Reference

		Section	CarboNIX 15 [metric units]	Units	CarboNIX 15 [imperial units]	Units
Mounting Pattern	Bolt Circle Diameter	5	381.00	mm	15.000	inch
	Number of Fasteners		24	-	24	-
	Fastener Type		M6	-	1/4-20 or 1/4-28	-
	Flatness Tolerance		0.10	mm	0.40	inch
Keep-Out Dimensions	Outer Diameter	4.3	470	mm	18.5	inch
	Inner Diameter		323		12.7	
	Lock Mechanism Diameter		660		26.0	
	Lock Mechanism Width		105		4.1	
Mass	S-Ring	0	0.329	kg	0.725	Lb_m
	S-Ring (imperial)		0.470		1.04	
	L-Ring		2.281		5.03	
	Total		2.610		5.75	
	Total (imperial)		2.751		6.06	
	Fasteners		0.449		0.99	
Maximum Load - Segment	Z-Axis	4.4	6800	N	1528	Lb_f
	Tangential		1500		337	
	Radial		500		112	
Maximum Load - System	Z-Axis	4.4	163200	N	36689	Lb_f
	X- or Y-Axis		24000		5395	
Stiffness	Z-Axis ±25%	-	1.24E+09	N/m	7.05E+06	Lb_f/in
	Moment about X or Y ±25%		2.07E+07	Nm/rad	1.84E+08	in•Lb_f /rad
Separation	Nominal Separation Signal	-	24VDC for 0.5s			
	Average Separation Time		0.10 s			
Thermal	Lower Operating Limit	-	- 34	°C	- 29	°F
	Upper Operating Limit		+71	°C	+160	°F
	Lower Survival Limit		- 55	°C	- 76	°F
	Upper Survival Limit		+130	°C	+266	°F

3. CarboNIX 15 Microsatellite Separation System

3.1 System Description

The CarboNIX 15 is designed for microsatellites weighing up to 267 kg. It has a primary dimension of 15 inches, which is the diameter of the bolt circle hole pattern required on both the spacecraft and the upper stage of the launch vehicle.

The actual maximum payload is dependent on the launch vehicle loads and mounting orientation. Figure 5 shows two example configurations. The highest payload mass is available on Soyuz/Fregat when CarboNIX is "floor" mounted. The lowest payload mass is on Falcon 9 on the ESPA Ring "wall" mounting.

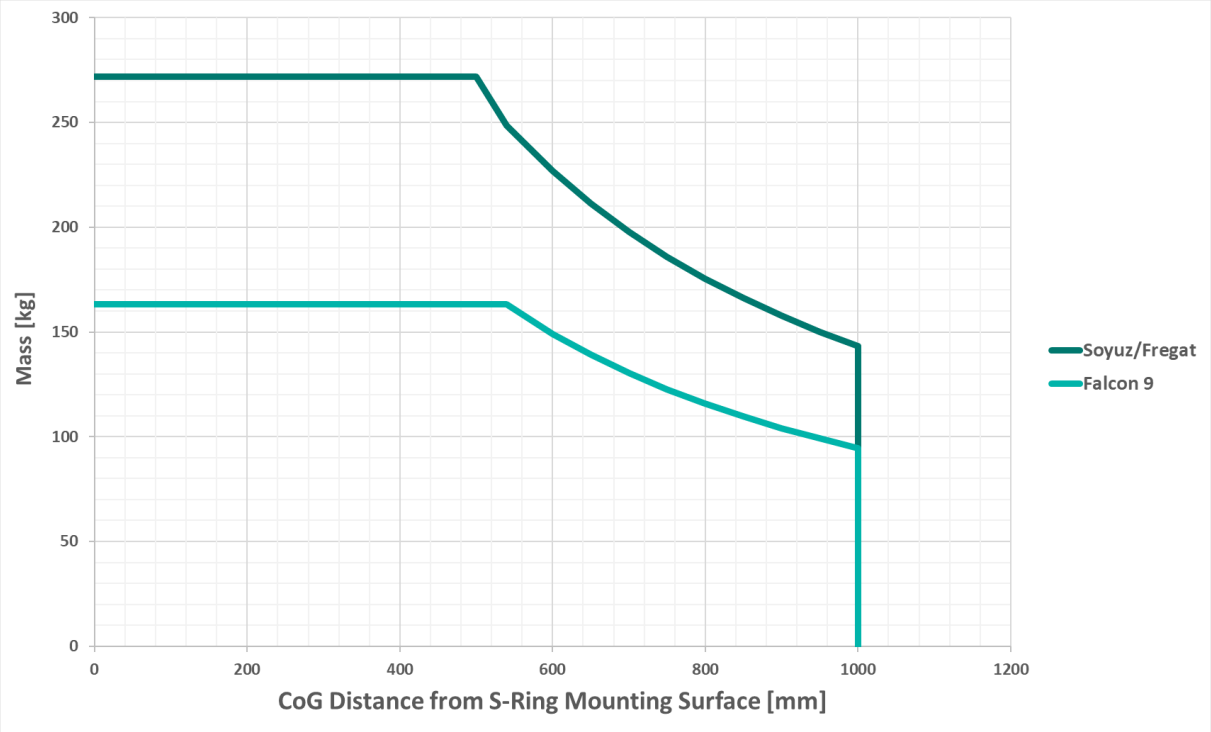

Figure 5: Maximum Payload Mass CarboNIX 15

3.2 Components and Features

The main components of CarboNIX are shown in Figure 6.

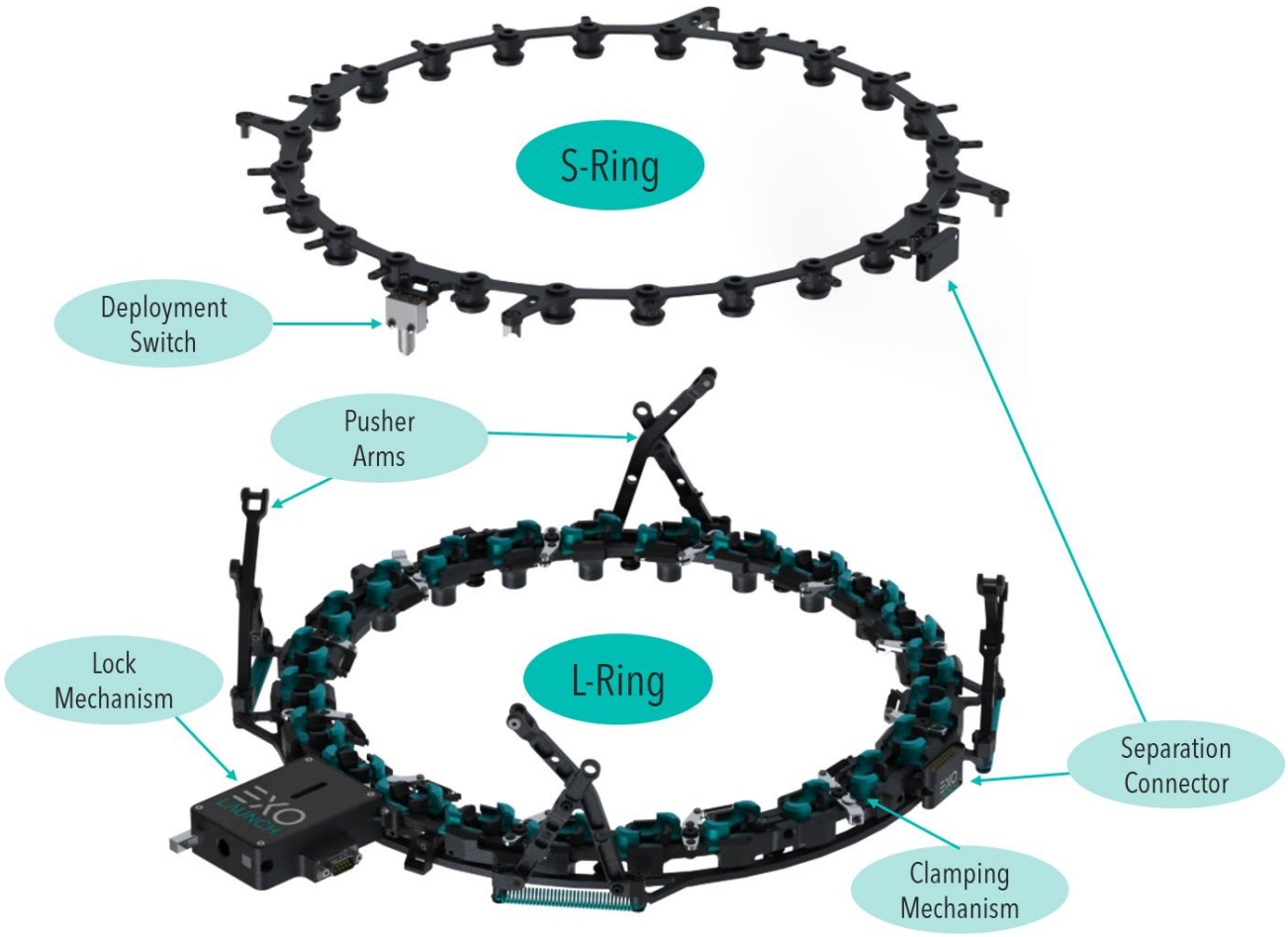

Figure 6: Main components of the CarboNIX Separation System

2.1.1 S-Ring

The S-Ring is the part of CarboNIX that is attached to the satellite. It is fastened to the bottom of the satellite using 24 M6 screws in a circular pattern 15 inch (381 mm) in diameter. The mass of the S-Ring is 315 grams.

Figure 7: CarboNIX S-Ring.

For customers that have 1/4-20 or 1/4-28 threaded holes on their satellite base plate, an S-Ring has been developed that can accommodate the slightly larger fastener.

Figure 8: CarboNIX S-Ring for Imperial Screws.

2.1.2 L-Ring

The L-Ring is the portion of the satellite that remains on the launch vehicle after separation. It is physically and electonically connected to the launch vehicle adapter. The mass of the L-Ring 2400 grams.

Figure 9: CarboNIX L-Ring.

3.2.1.1 Pushing Mechanism

Once the S-Ring has been release, the pushing mechanism creates the separation velocity between the launch vehicle and the satellite. This is done using four pushing arms located around the outside of the system.

Figure 10: CarboNIX in the deployed state.

2.1.3 Deployment Switch

Customers may choice to mount one or several deployment switches on the S-Ring in order to communicate the separation event to the satellite. These ITW 65-401000 switches are extremely rugged and have extensive flight heritage. The "over-travel" actuator ensures that the switch will not toggle until full separation has occurred.

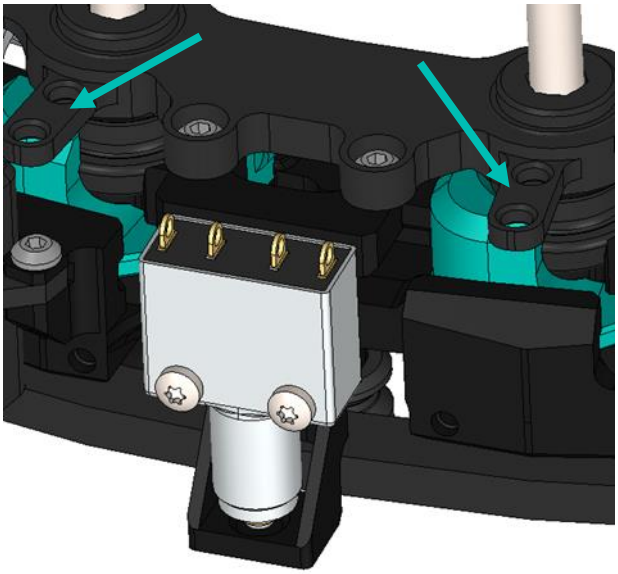

Figure 11: CarboNIX Deployment Switch. The green arrows indicate the cable tie mounts to assist harness routing.

2.1.4 Separation Connector

The separation connector is an optional connector that can be used to deliver a signal to the satellite before separation occurs and/or for the satellite charging . The connector has a slightly negative insertion force, where it tends to want to push apart while still making firm contact. This means that there is no chance for it to stick together during separation.

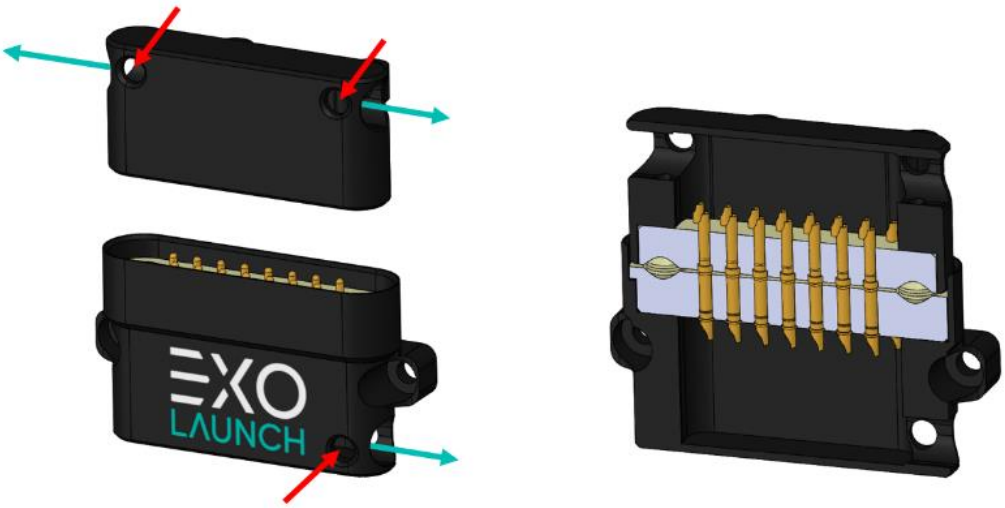

Figure 12: CarboNIX Separation Connector. Green arrows show possible harness routing directions, and red arrows show zip tie holes for strain relief.

The separation connector can be used for a variety of mission scenarios, such as activating the satellite before separation so that the separation event can be recorded, or charging batteries after payload fairing encapsulation. All electrical interfaces must adhere to limitations determined by the launch authority.

The deployment switch and separation connector can each be connected to CarboNIX at one of four separate locations around the outside of the ring. This provides flexibility in cable routing for the satellite designer.

Figure 13: Separation Connector and Deployment Switch Locations

2.1.5 Remove Before Flight (RBF) Elements

CarboNIX uses several types of RBF elements. Two pins are used to secure the lock rings in the closed position and prevent accidental release of the S-Ring. Four additional pins are used to secure the pushing arms in the down position, which is useful for securing the arms while locking the S-Ring to the L-Ring.

Finally, a tool is used to "cock" the system, closing the clamping mechanism and securing the locks in place.

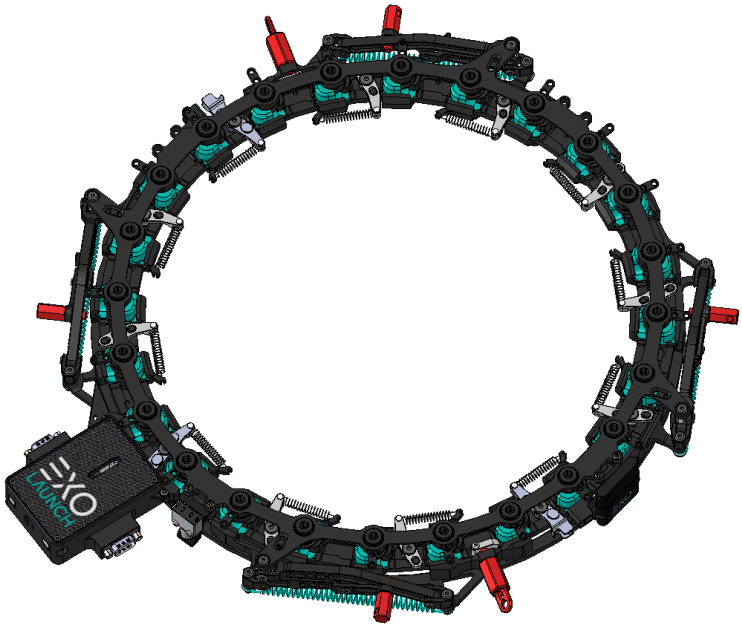

Figure 14: CarboNIX with all RBF elements (red).

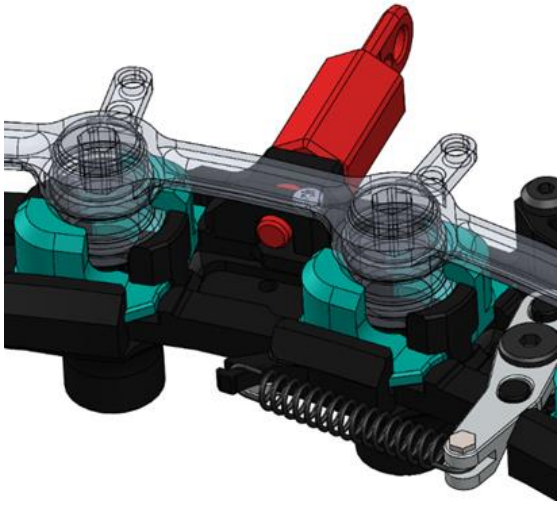

Figure 15: Clamping mechanism RBF prevents the S-Ring from coming loose.

Figure 16: Pushing mechanism RBF binds two arms together and prevents deployment.

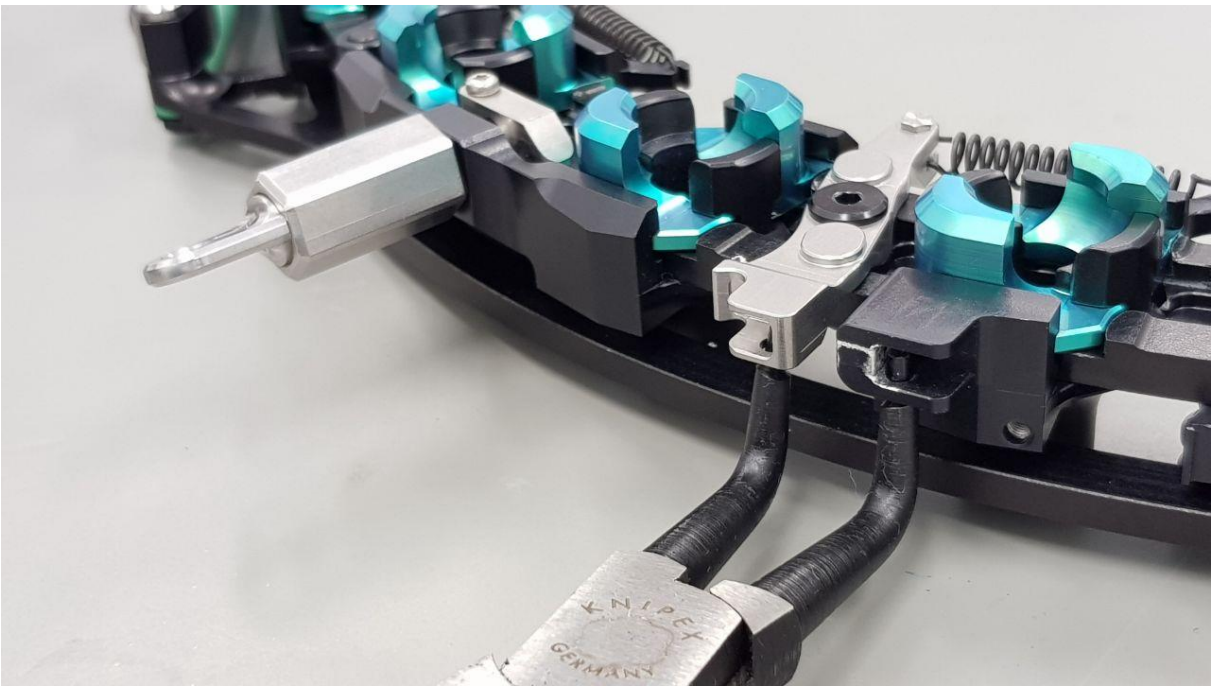

Figure 17: Clamping tool shown with RBF pin installed

4. Mechanical Properties

4.1 Coordinate System

The CarboNIX coordinate system is shown in the image below.

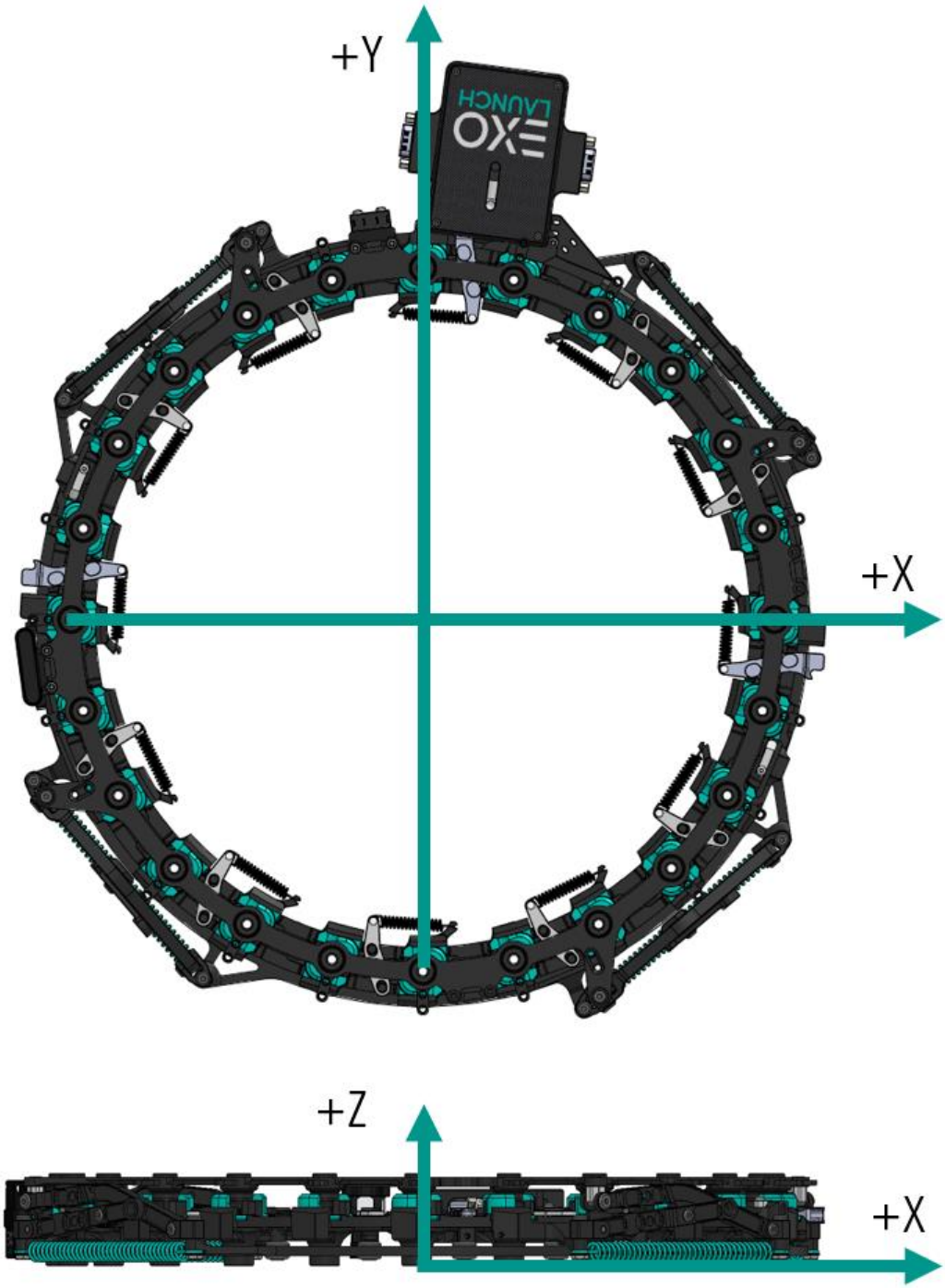

Figure 18: CarboNIX Coordinate System

4.2 Mass Properties

Standard S-Ring													
Stowed							Deployed						
							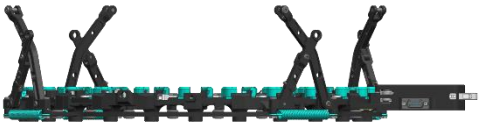						
Stowed	**S-Ring with Screws***		**S-Ring without Screws**		**L-Ring with Screws***		**L-Ring without Screws**		**Total with Screws***		**Total without Screws**		**Unit**
Mass	**0.554**		**0.329**		**2.515**		**2.291**		**3.069**		**2.620**		**kg**
Center of Gravity	X	0.0	X	0.0	X	5.3	X	5.9	X	4.4	X	5.1	mm
	Y	0.0	Y	0.0	Y	32.2	Y	35.3	Y	26.3	Y	30.9	
	Z	-7.9**	Z	-9.0**	Z	17.9	Z	20.2	Z	22.2	Z	22.7	
Moments of Inertia rel. to CoG	I_{xx}	0.010	I_{xx}	0.006	I_{xx}	0.059	I_{xx}	0.054	I_{xx}	0.070	I_{xx}	0.061	kgm²
	I_{yy}	0.010	I_{yy}	0.006	I_{yy}	0.043	I_{yy}	0.039	I_{yy}	0.054	I_{yy}	0.046	
	I_{zz}	0.020	I_{zz}	0.012	I_{zz}	0.102	I_{zz}	0.093	I_{zz}	0.123	I_{zz}	0.106	
Deployed	**S-Ring with Screws***		**S-Ring without Screws**		**L-Ring with Screws***		**L-Ring without Screws**		**Total with Screws***		**Total without Screws**		**Unit**
Center of Gravity	X	-	X	-	X	5.4	X	6.0	X	-	X	-	mm
	Y	-	Y	-	Y	32.3	Y	35.5	Y	-	Y	-	
	Z	-	Z	-	Z	19.9	Z	22.4	Z	-	Z	-	
Moments of Inertia rel. to CoG	I_{xx}	-	I_{xx}	-	I_{xx}	0.060	I_{xx}	0.055	I_{xx}	-	I_{xx}	-	kgm²
	I_{yy}	-	I_{yy}	-	I_{yy}	0.044	I_{yy}	0.040	I_{yy}	-	I_{yy}	-	
	I_{zz}	-	I_{zz}	-	I_{zz}	0.102	I_{zz}	0.094	I_{zz}	-	I_{zz}	-	

*M6x25 A4-80 socket head screws with Nord-Lock washers are assumed for these calculations. Values may change depending on screw choice, mounting plate thickness and threadlocking technique.

**S-Ring CoG is taken from the interface surface that rests within the mounting counterbore.

Imperial S-Ring

Stowed	Deployed
	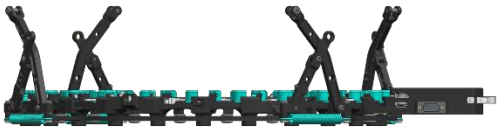

Stowed	S-Ring with Screws*		S-Ring without Screws		L-Ring with Screws*		L-Ring without Screws		Total with Screws*		Total without Screws		Unit
Mass	0.686		0.489		2.515		2.291		3.201		2.780		kg
Center of Gravity	X	0.0	X	0.0	X	5.3	X	5.9	X	4.3	X	4.9	mm
	Y	0.0	Y	0.0	Y	32.2	Y	35.3	Y	25.9	Y	29.8	
	Z	-8.3**	Z	-8.3**	Z	17.9	Z	20.2	Z	23.3	Z	24.2	
Moments of Inertia rel. to CoG	I_{xx}	0.013	I_{xx}	0.009	I_{xx}	0.059	I_{xx}	0.054	I_{xx}	0.073	I_{xx}	0.065	kgm²
	I_{yy}	0.013	I_{yy}	0.009	I_{yy}	0.043	I_{yy}	0.039	I_{yy}	0.057	I_{yy}	0.049	
	I_{zz}	0.025	I_{zz}	0.018	I_{zz}	0.102	I_{zz}	0.093	I_{zz}	0.128	I_{zz}	0.112	
Deployed	**S-Ring with Screws***		**S-Ring without Screws**		**L-Ring with Screws***		**L-Ring without Screws**		**Total with Screws***		**Total without Screws**		**Unit**
Center of Gravity	X	-	X	-	X	5.4	X	6.0	X	-	X	-	mm
	Y	-	Y	-	Y	32.3	Y	35.5	Y	-	Y	-	
	Z	-	Z	-	Z	19.9	Z	22.4	Z	-	Z	-	
Moments of Inertia rel. to CoG	I_{xx}	-	I_{xx}	-	I_{xx}	0.060	I_{xx}	0.055	I_{xx}	-	I_{xx}	-	kgm²
	I_{yy}	-	I_{yy}	-	I_{yy}	0.044	I_{yy}	0.040	I_{yy}	-	I_{yy}	-	
	I_{zz}	-	I_{zz}	-	I_{zz}	0.102	I_{zz}	0.094	I_{zz}	-	I_{zz}	-	

*M6x25 A4-80 socket head screws with Nord-Lock washers are assumed for mounting the L-Ring, and NAS1351N4-14 fasteners with Nord-Lock washers on the S-Ring. Values may change depending on screw choice, mounting plate thickness and threadlocking technique.

**S-Ring CoG is taken from the interface surface.

4.3 Outer Dimensions

The outer dimensions of the CarboNIX 15 are shown below. These dimensions shall be considered the "keep-out" volume, an area where no part of the satellite or launch vehicle should protrude.

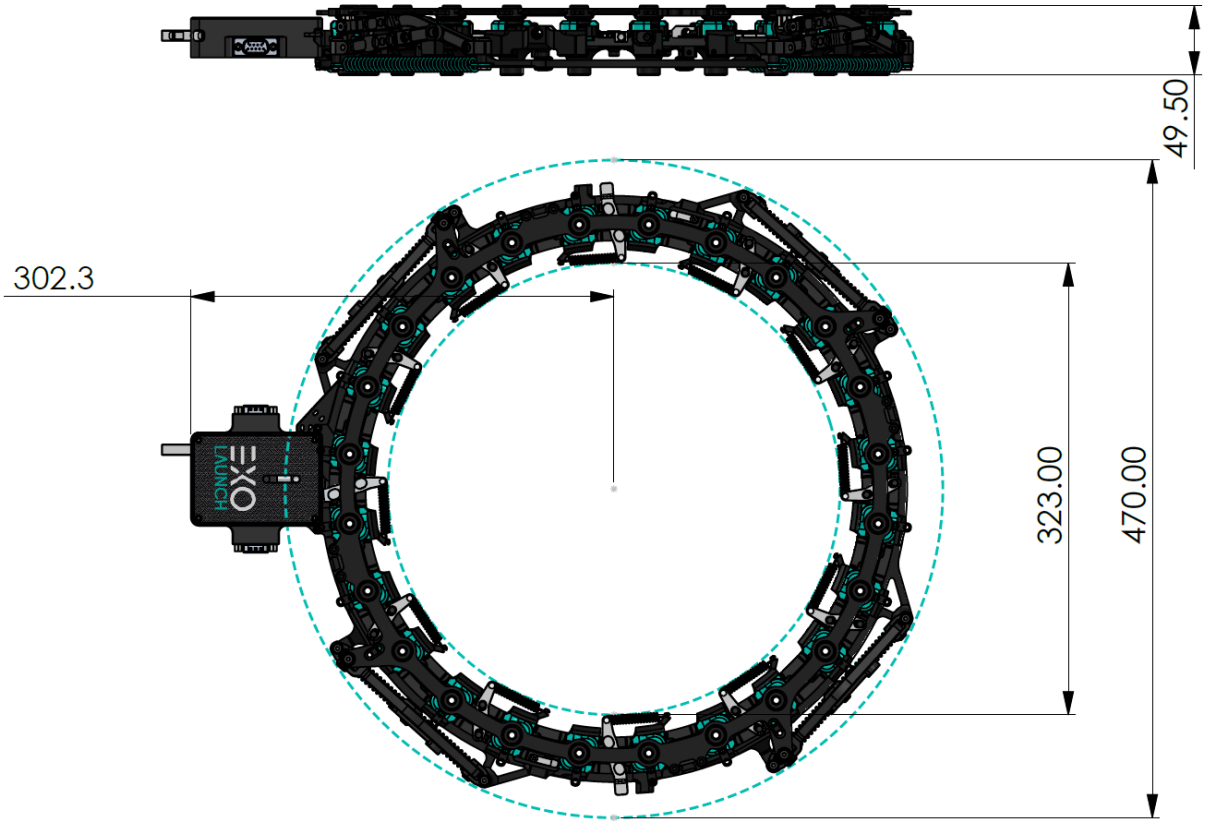

Figure 19: Outer dimensions of the CarboNIX in the stowed configuration

A simplified model of the CarboNIX 15 is available for virtual fit checks and integration planning. Contact EXOLAUNCH to receive a copy of this data.

4.4 Maximum Loads

The maximum payload mass fundamentally depends on the maximum load of each of the 24 segments of CarboNIX. However, the maximum segment loading alone is not sufficient for calculating the maximum payload mass; one must also consider the mass properties of the spacecraft as well as the load profile of the launch vehicle and the mouting orientation to ensure that no single segment is overloaded.

Figure 1 below shows the calculated payload mass for various launch vehicles. WARNING: this graph makes several assumptions, including the mounting orientation of CarboNIX on the launch vehicle and the location of the satellite CoG. Actual maximum payload mass can only be determined on a case-by-case basis.

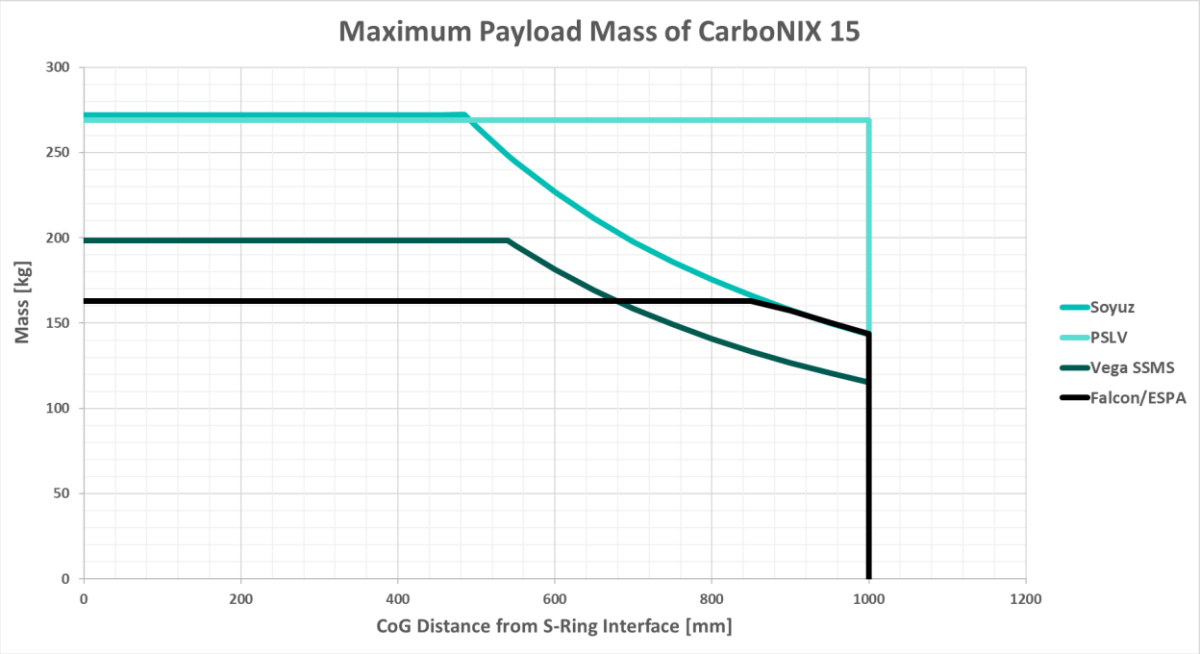

Figure 20: Maximum CarboNIX Payload on Various Launch Vehicles

4.5 Separation Velocity

Separation velocity depends on the spacecraft mass and the strength of the pusher springs. The spring strength can be tailored to match a desired deployment velocity. The graph below exemplifies the relation between satellite mass and deployment speed relative to different levels of the total spring energy of all four pusher springs.

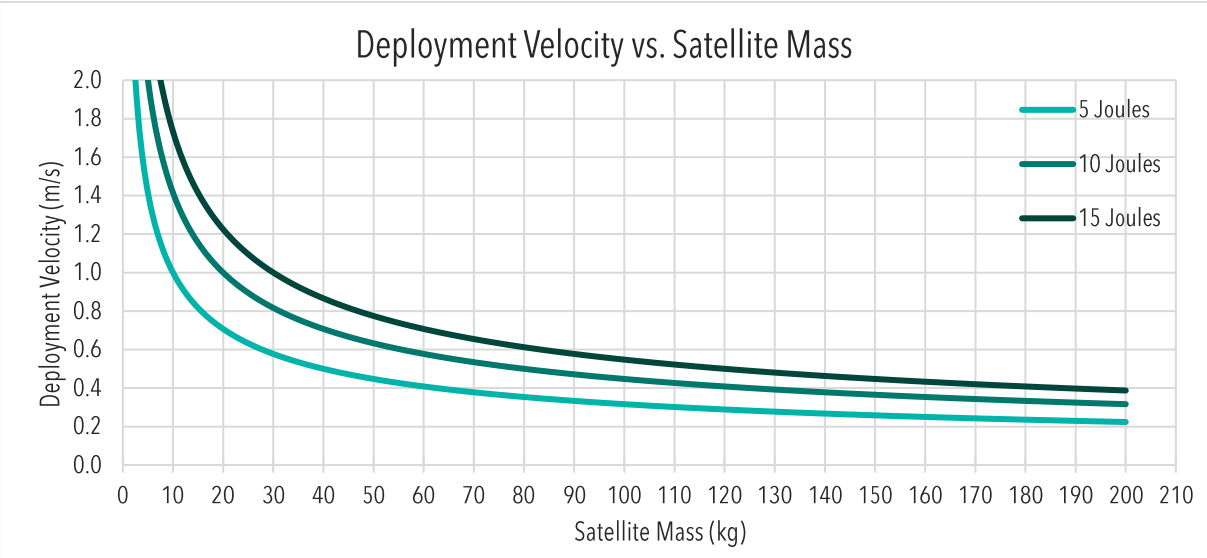

The spring sets have a total energy tolerance of about ±25%. Table 1 below shows the minimum and maximum values of the separation energy. The actual spring energy will be measured during the manufacturing process, and EXOLAUNCH will calculate the predicted separation velocity. For making rough separation velocity estimates, the equation for Kinetic Energy is sufficient.

$$KE = \frac{1}{2}mv^2$$

Table 1: Spring set minimum and maximum energy

Nominal 15J		Nominal 10J		Nominal 5J	
Min	Max	Min	Max	Min	Max
15.0	18.4	9.4	11.4	5.0	6.5

4.6 Rotation Rate

Due to the unique nature of the CarboNIX pusher arm system, all four pusher arms will extend at the same speed, regardless of the loads each individual arm faces. For this reason, the satellite will separate with near-zero initial rotation.

5. Mechanical Interfaces

5.1 S-Ring Interface

In order to adapt a satellite to use CarboNIX, the base of the satellite must be able to accept the S-Ring. If the satellite was originally designed for a different interface, then a so-called "transfer ring" should be used to transform the interface into one that can mount the S-Ring. The transfer ring could be provided by EXOLAUNCH or produced by the Customer.

5.1.1 S-Ring Hole Pattern

In order to mount the S-Ring to the bottom of the satellite, 24 equally spaced holes with M6 threads and a depth of at least 12 mm shall be used. Each hole requires a ⌀13 mm counterbore with a depth of 1.8 mm.

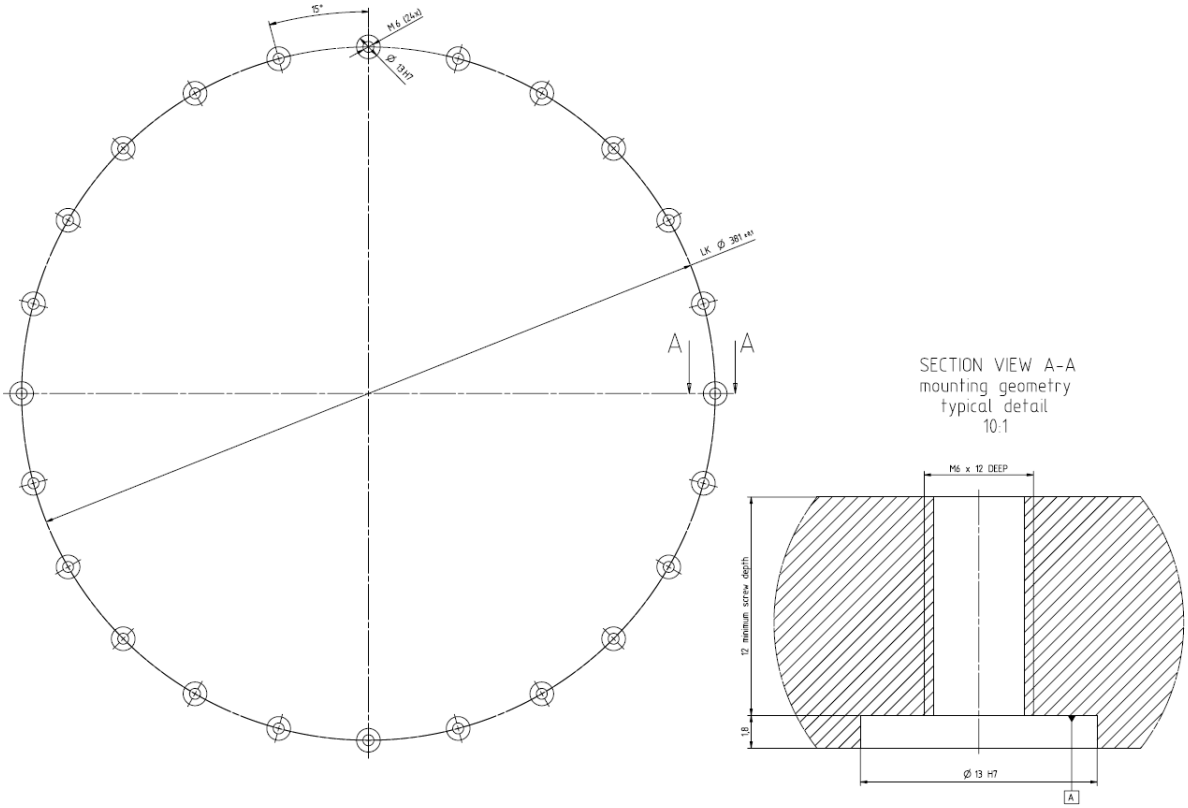

Figure 21: S-Ring Mounting Pattern

5.1.2 S-Ring IM

A special S-Ring has been developed called the S-Ring IM which is designed to match the bottom interface required by other 15" separation systems. While marginally heavier than the standard S-Ring, it does not require the counterbore features and can accept ¼" fasteners.

5.2 L-Ring Interface

Similar to the S-Ring, the L-Ring requires a hole pattern of 24 equally spaced unthreaded holes. Each hole requires a ⌀16.1 mm counterbore with a depth of 1.5 mm. On the launch vehicle side, there should be 7.5 mm plate thickness between the M6 screw head and the counterbore (as shown in Figure 24).

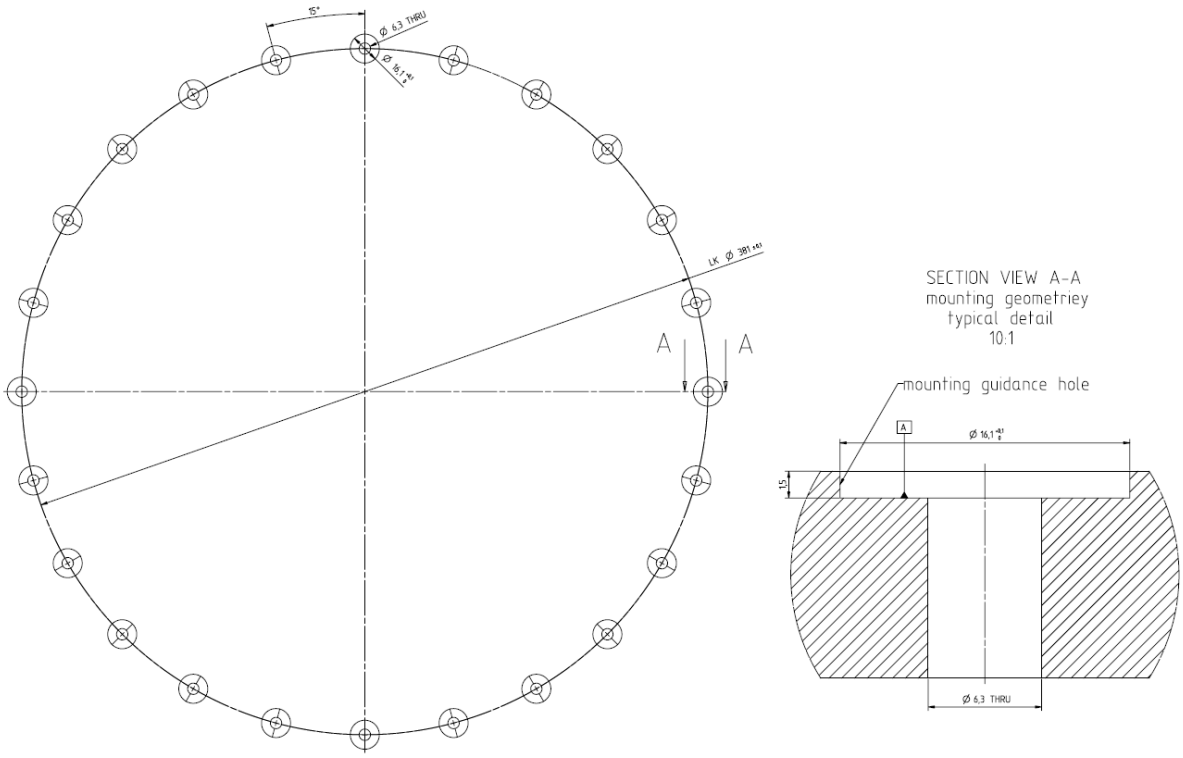

Figure 22: L-Ring Mounting Pattern

6. Electrical Interface

6.1 DSub 9 Connectors

The CarboNIX locking mechanism has two male DSub 9 connectors (Harting 09674095615). Each connector is identical, and either one or both of the connectors can be used to trigger CarboNIX.

Figure 23: The two DSub 9 connectors.

Table 2 shows the pinout of the connectors.

Table 2: CarboNIX Pinout

Pin	Designation	Function
1	Pusher Arm TM 1	Closed after deployment
2	Pusher Arm TM 2	Closed after deployment
3	-	-
4	Actuator 2	Return
5	Actuator 2	VCC
6	Clamp TM 1	Closed after deployment
7	Clamp TM 2	Closed after deployment
8	Actuator 1	Return
9	Actuator 1	VCC

7. Installation and Operation

7.1 Mounting Configuration

CarboNIX can be mated with the upper stage and the satellite in the following way.

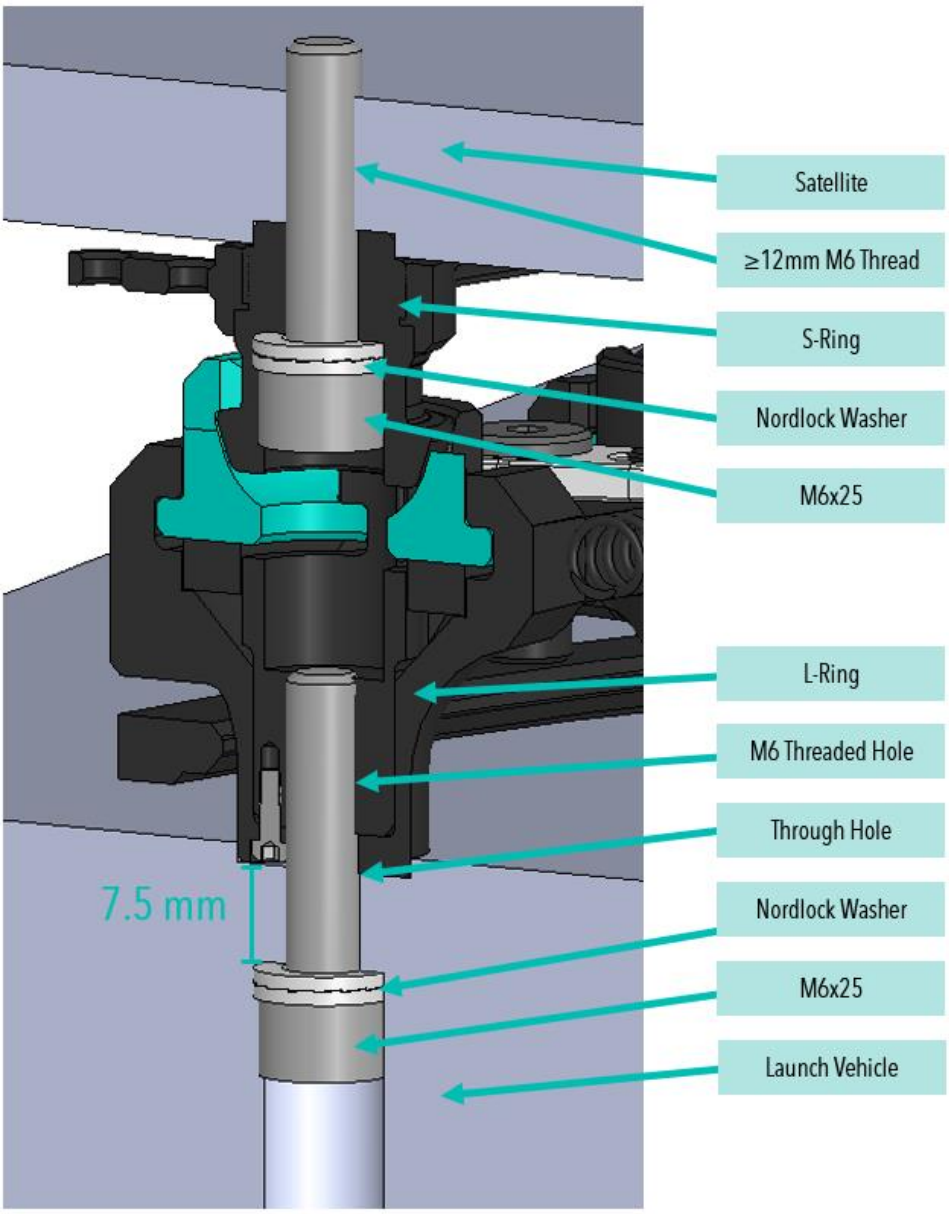

Figure 24: Preferred launch vehicle mounting configuration.

Additional mounting configurations are possible, depending on the requirements of the customer and launch authority. Contact EXOLAUNCH for details.

7.2 CarboNIX Clocking

The S-Ring is rotationally symmetric and can be installed in any of the 24 possible orientations on the satellite's bottom plate. The L-Ring is also rotationally symmetric and can be installed in any of 24 positions onto the launch vehicle. Between the S-Ring and L-Ring it is only important that the pusher arms, deployment switches and separation connectors align properly. The satellite must also avoid protrusions that would impact the CarboNIX locking mechanism, or interfere with the operation of the cocking tools.

It is important to consider the relationship between the satellite, CarboNIX and the upper stage of the launch vehicle to ensure that there are no interferences.

Figure 25: CarboNIX and payload mounted on the upper stage. Note that while the back face of the payload is parallel with the upper stage, the CarboNIX locking mechanism is slightly rotated.

EXO LAUNCH

EXOLAUNCH.COM